omega

installation
and operating
instructions

OG91XA cooktop

Dear customer,

We thank you and congratulate you on your choice.
This new carefully designed product, manufactured with the highest quality materials, has been carefully tested to satisfy all your cooking demands.
We would therefore request you to read and follow these easy instructions which will allow you to obtain excellent results right from the start.
May we wish you all the very best with your modern appliance!

THE MANUFACTURER

APPLIANCE IS CONCEIVED FOR DOMESTIC USE ONLY. THE MANUFACTURER SHALL NOT IN ANY WAY BE HELD RESPONSIBLE FOR WHATEVER INJURIES OR DAMAGES ARE CAUSED BY INCORRECT INSTALLATION OR BY UNSUITABLE, WRONG OR ABSURD USE.

- The appliance is not intended for use by young children or infirm persons without supervision.
- Young children should be supervised to ensure that they do not play with the appliance.
- If the supply cord is damaged, it must be replaced by the manufacturer or its service agent or a similarly qualified person in order to avoid a hazard.
- If a stationary appliance is not provided with a supply cord and a plug or with other means for disconnection from the supply having an air gap contact separation in all active (phase) conductors, the instructions shall state that such means for disconnection shall be incorporated in the fixed wiring according to the wiring rules.

INSTRUCTIONS FOR USE

FOR VITROCERAMIC HOBS SEE ADDITIONAL INSTRUCTIONS

Installation

All the operations concerned with the installation (electrical connection) must be carried out by qualified technicians, in terms with the standards in force.
For specific instructions, kindly read the part reserved for the installation technician.

Use

Gas burners (Fig. 1-1a-1b).
The ignition of the gas burner is carried out by putting a small flame to the upper part holes of the burner, pressing and rotating the corresponding knob in an anti-clockwise manner, until the maximum position has coincided with the marker. When the gas burner has been turned on, adjust the flame according to need. The minimum position is found at the end of the anti-clockwise rotation direction.
In models with automatic ignition, operate the knob as described above, pressing simultaneously, the corresponding push-button. The electric spark between the ignition plug and the burner provides the ignition of the burner itself. After ignition, immediately release the push-button and adjust the flame according to need.
To start the burner in models equipped with a thermoelectric resistance keep the knob pressed hard for 10 seconds, as described above, after placing it on its maximum value. After releasing the knob, make sure the burner is actually lit.
N.B. - we recommend the use of pots and pans with a diameter matching that of the burner, thus preventing the flame from escaping from the bottom part and surrounding the pot
- do not leave any empty pots or pans on the fire
- do not use any tools for grill-cooking on Crystal hobs.
When cooking is finished, it is also a good norm to close the main gas pipe tap and cylinder.

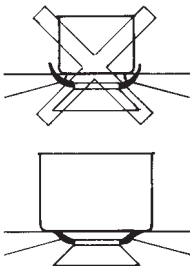

	GAS
wok	Ø 20-32
fast	Ø 20-26
semifast	Ø 14-20
auxiliary	Ø 10-14

Fig. 1

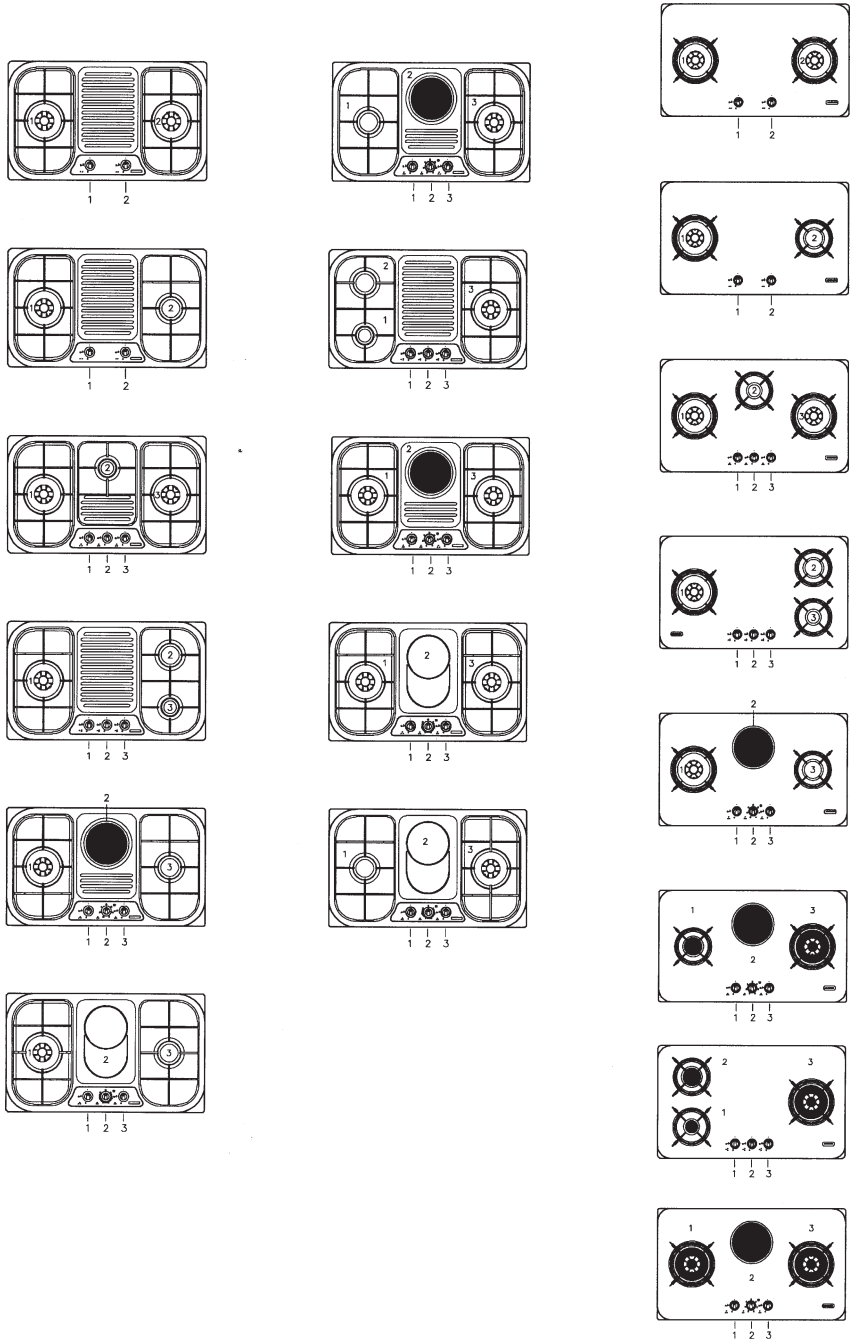

Fig. 1a

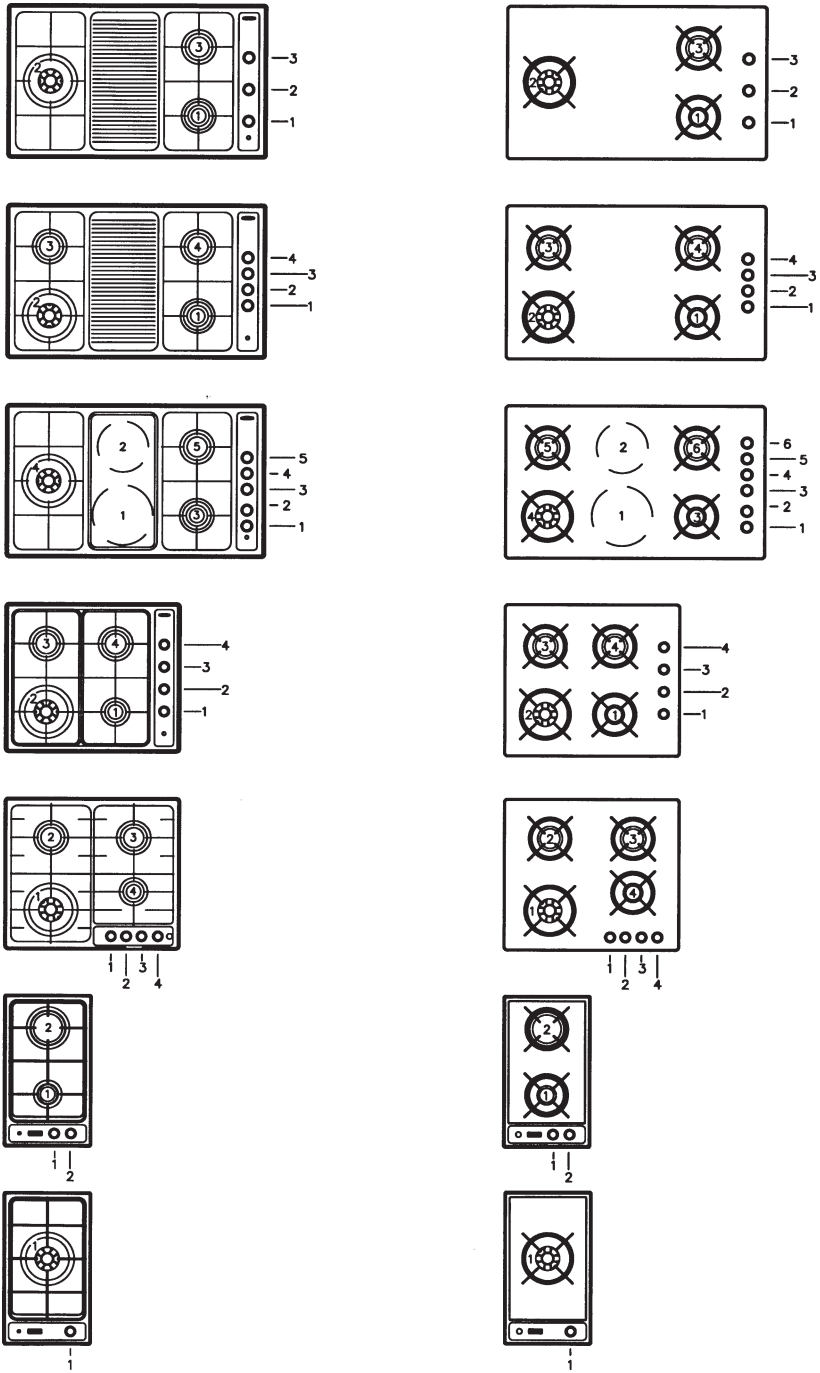

Fig. 1 b

Vitroceramic Heating elements
Electrical plates
(Figg. 2-3-1a-1b). Rotate the knob towards the position required for cooking and bear in mind that the higher the number, the higher the heat output. See table "use of electrical plates".
The pilot light on the stove panel level signals that the plate is "on".
Some types of pilot lights will maintain some slight luminescence even after disconnection. That is quite normal.

N.B.: When using electrical elements/plates, we recommend flat bottom recipients with a diameter equal or slightly larger than that of the plate itself.
- avoid liquid overflow. Therefore, after boiling or heating liquids, reduce the heat output;
- do not leave the electrical elements/plates on with empty pots and pans;
- when cooking is finished, rotate the knob back into closing and/or disconnected position.

In the event of even a slight fracture on the cooking vitroceramic surface, disconnect the electric power supply immediately.

Maintenance
Gas/Electric
Prior to any operation, disconnect the appliance from the electrical system.
For long-life to the equipment, a general cleaning operation must take place periodically, bearing in mind the following:
- the glass, steel and/or enamelled parts must be cleaned with suitable non-abrasive or

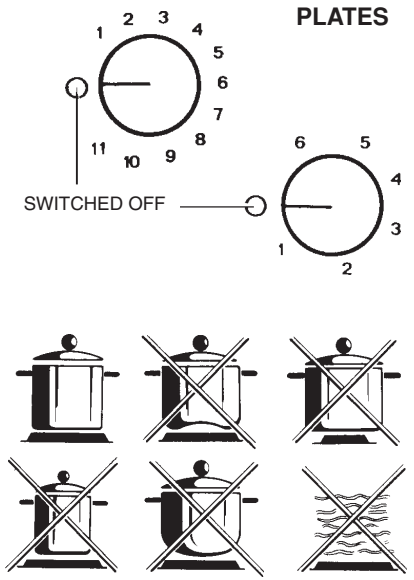

Fig. 2

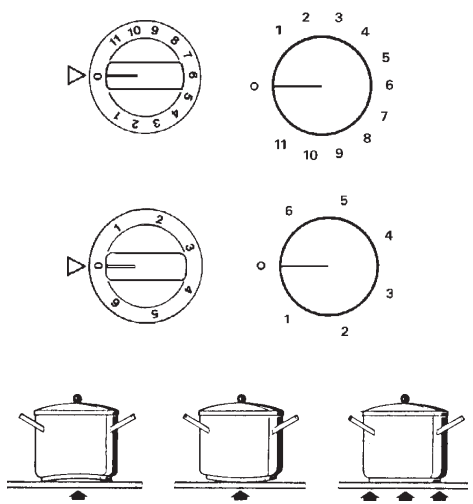

Fig. 3

corrosive products (found on the market). Avoid chlorine-base products (bleach, etc.);

- avoid leaving acid or alkaline substances on the working area (vinegar, salt, lemon juice, etc.).
- the wall baffle and the small covers (mobile parts of the burner) must be washed frequently with boiling water and detergent, taking care to remove every possible encrustation. Dry carefully and check that none of the burner holes is fully or partially clogged;
- the electrical parts are cleaned with a damp cloth and are lightly greased with lubricating oil when still warm.
- the stainless steel grids of the working area, after having been heated, take on a bluish tint which does not deteriorate the quality. To bring colour back to its original state, use a slightly abrasive product.

N.B.- Cleaning of the taps must be carried out by qualified personnel, who must be consulted
in case of any functioning anomaly.
Check periodically the state of conservation of the flexible gas feed pipe. In case of leakage, call immediately the qualified technicians for its replacement.

Vitroceramic
Fig. 3a) First of all remove stray food bits and grease drops from the cooking surface with the special scraper (fig. 4). Then clean the hot area as best as possible with SIDOL, STAHLFIX or other similar products with a papertowel, then rinse again with water and dry with a clean cloth.
Pieces of aluminum foil and plastic material which have inadvertently melted or sugar remains or highly sacchariferous food have to be removed immediately from the hot cooking area with the special scraper (fig. 4). This is to avoid any possible damage to the surface of the top.
Under no circumstances should abrasive sponges or irritating chemical detergents be used such as oven sprays or spot removers.

Battery replacement (Fig. 4)
Unscrew plug and replace old battery.

Fig. 3a

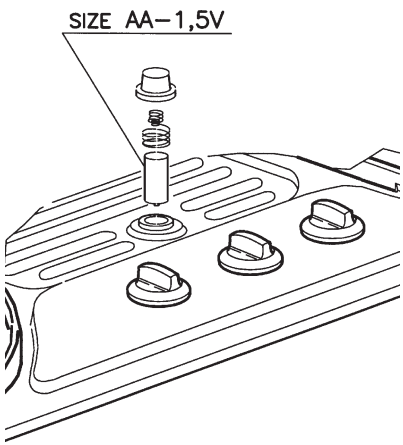

Fig. 4

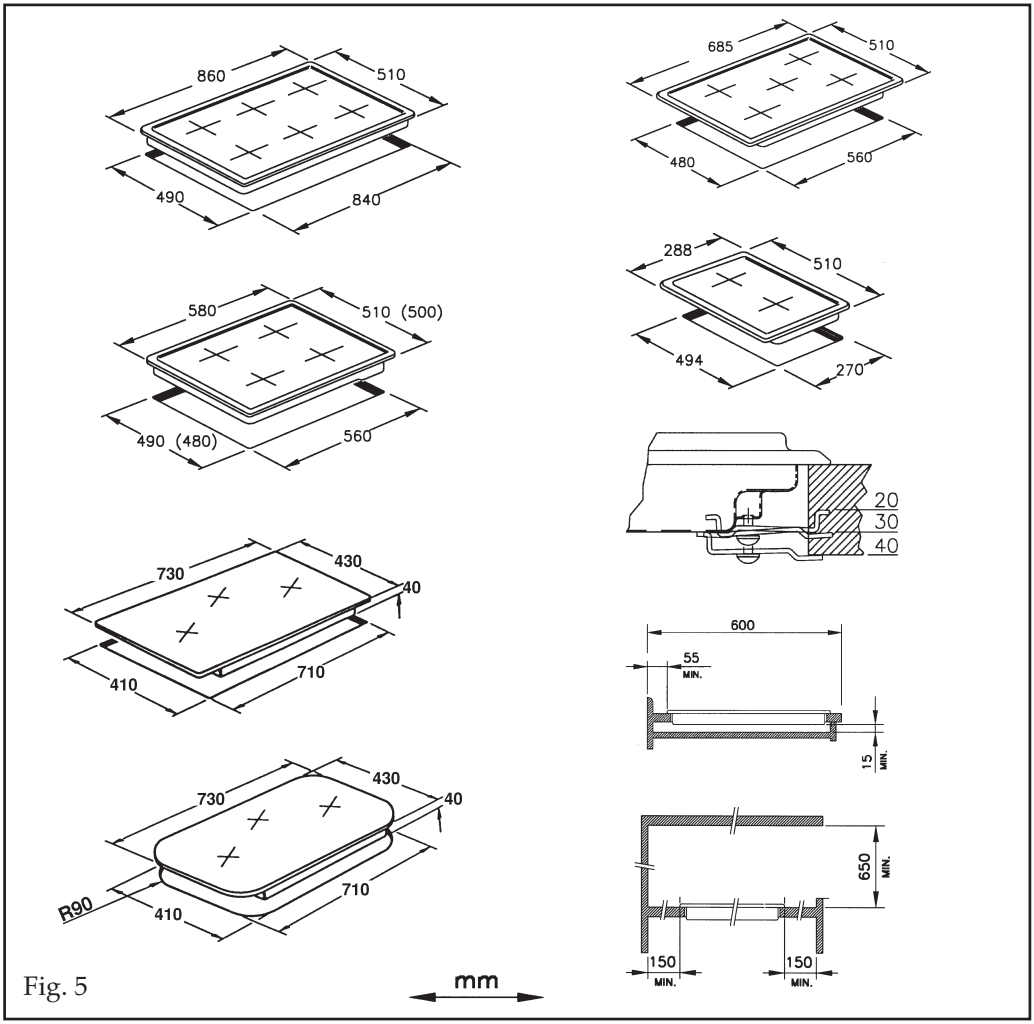

Fig. 5

WARNING: CRYSTAL HOBS

DO NOT TIGHTEN SCREW 'A' EXCESSIVELY, ONE TURN MAX WILL BE SUFFICIENT, AFTER CORRECTLY FITTING SHAFT 'B' INTO PLACE, AS SHOWN IN THE PICTURE. ENSURE THAT THE SUPPORTING SURFACE IS PERFECTLY EVEN. FIT THE APPROPRIATE EXPANDED SEAL. CRYSTAL HOBS MUST NOT BE SUBJECTED TO STRAINS CAUSED BY UNEVEN SUPPORTING SURFACES.

use of electrical plates - Vitroceramic Heating elements

commutator	energy regulator	heat intensity	cooking methods
1	1 - 2	slight	melting of fats etc.; heat small quantities of liquid
2	3 - 4	mild	heating of medium quantities of liquid; puddings, long-cooking sauces
3	5 - 6	slow	defreezing - heat large quantities of liquid; cooking below boiling temperature
4	7 - 8	medium	tender roasts; cooking at boiling temperature
5	9 - 10	high	roasts - boiled food; pan-frying of meats
6	10 - 11	burning heat	bring large quantities of liquid to boil; fry

INSTRUCTIONS FOR THE INSTALLER

Installation

These Instructions are for the qualified technician, as a guide to the installation, adjustment and maintenance, according to the laws and standards in force. Any of these operations must always be carried out when the appliance has been disconnected from the electric system.

Installation (Gas)

This appliance is not provided with a combustion product discharge. It is recommended that it be installed in sufficiently aerated places, in terms of the laws in force. The quantity of air which is necessary for combustion must not be below 2.0 m^3/h for each kW of installed power.
See table of burner power.

Positioning

(Fig. 5). The appliance can be fitted into a working area as illustrated on the corresponding figure.
Apply the seal provided over the whole of the area perimeter.

Gas connection

(Fig. 6) Connect the appliance to the gas cylinder or to the installation according to the prescribed standards in force, and ensure beforehand, that the appliance matches the type of gas available. Otherwise, see "Adaptation to various types of gas".
Furthermore, check that the feed pressure falls within the values described on the table: "User chacteristics".

Rigid/semi rigid metal connection

Carry out the connection with fittings and metal pipes (even flexible pipes) so as to obtain counter stress the inner parts of the appliance.
N.B. - when the installation has been carried out, check the perfect sealing of the entire connection system, by using a soapy solution.

Electrical connection

(Fig. 7) Prior to carrying out the electrical connection, please ensure that:

- the plant characteristics are such as to follow what is indicated on the matrix plate placed at the bottom of the working area;
- that the plant is fitted with an efficient earth connection, following the standards and law provisions in force. The earth connection is compulsory in terms of the law.

Should there be no cable and/or plug on the equipment, use suitable absorption material for the working temperature as well, as indicated on the matrix plate. Under no circumstance must the cable reach a temperature above 50°C of the ambient temperature.
Should a direct connection to the network be required, it will be necessary to interpose an omnipolar switch with minimum aperture between the 3 mm. contacts, dimensioned to bear the plate load and it must follow the standards in force

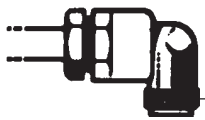

Fig. 6

(the yellow/green earth cable must not be interrupted by the switch). The plug or omnipolar switch must be easily reached on the installed equipment.
The manufacturers decline any responsibility in the event of non-compliance with what is described above and the accident prevention norms not being respected and followed.

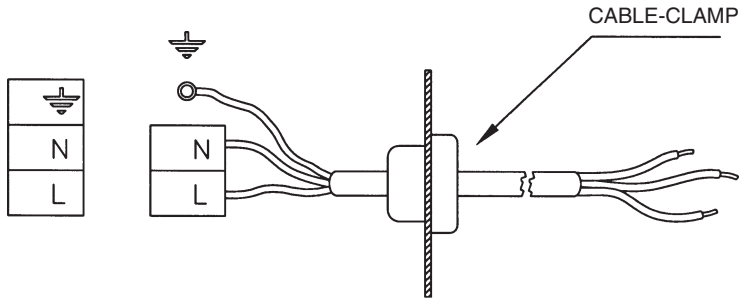

Fig. 7

Adaptation to various types of gas

(Fig. 8-9) Should the appliance be pre-set for a different type of gas than that available, proceed as follows:

- replace the injectors (Fig. 7) with the corresponding type of gas to be used (see table "Uses characteristics").
- to adjust to the minimum, use a screwdriver on the screw placed on the tap (Fig. 8) after turning the tap to its minimum position. For LPG (butane/propane) screw tight.

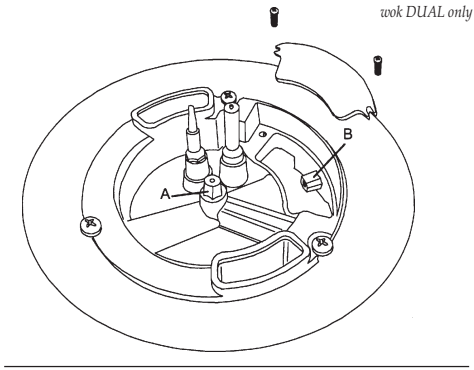

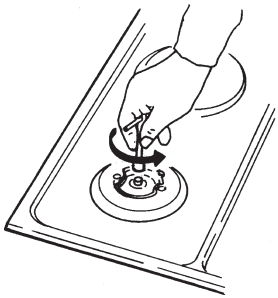
Fig. 8

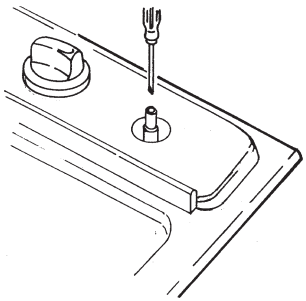
Fig. 9

USER CHARACTERISTICS

GAS BURNERS

FEED TYPE	FEED PRESSURE mbar	BURNER	Ø INJECTORS 1/100 mm	THÉRMAL CAPACITY W	CONSUMPTION	
Natural gas G20	10/20	fast	155/129	3000	286	1/h
		semifast	117/101	1750	167	
		auxiliary	92/77	1000	95	
		wok DUAL	70A-150B/63A-121B	3500	333	
		wok DUAL fish	70A-170B/63A-140B /	4250	405	
LPG G30/G31	28-30/27.5	fast	87/94	3000	218	g/h
		semifast	66/70	1750	127	
		auxiliary	50/56	1000	73	
		wok DUAL	37A-90B/44A-96B	3500	254	
		wok DUAL fish	37A-97B/44A-100B	4250	309	
Towngas G110	8-10	fast	320	3000	680	1/h
		semifast	192	1750	398	
		auxiliary	150	1000	227	
		wok DUAL fish	150A/350B	3500	794	

ELECTRICAL PLATES

FEED	TYPE	W	ADJUSTMENT
~ 230 V	normal Ø 145 - Ø 180	1000 - 1500	commutator (0÷6) energy regulator (0÷11)
	fast Ø 145 - Ø 180	1500 - 2000	

VITROCERAMIC HEATING ELEMENTS

FEED	TYPE	W	ADJUSTMENT
~ 230 V	triple-circuit radiant Ø 145 - Ø 180	1200 - 1700	commutator (0÷6)
	single-circuit radiant Ø 145 - Ø 180	1200 - 1700	energy regulator (0÷11)
	mixed-circuit radiant/halogen Ø 145 - Ø 180	1200 - 1800	energy regulator (0÷11)
	duble-circuit oval radiant Ø 145 x 300	2000	commutator (0÷4)

The manufacturer declines all responsibility for possible inaccuracies contained in this pamphlet, due to printing or copying errors. We reserve the right to make on our own products those changes to be considered necessary or useful, without jeopardizing the essential characteristics.

COD. 1.002.16.1